杭州美赞电子有限公司 www.meizan.com.cn 0571-88915820;88857292

ESF300-S SPECIFICATIONS

	MODEL		ESF300-05	ESF300-12	ESF300-24
INPUT	VOLTAGE, FREQUENCY		AC100-120V / 200~240V (AC90~132V / 180~264V or DC255~370V), 50/60Hz (47~440Hz or DC)		
	CURRENT		100V~5.5A, 200V~3.5A		
	EFFICIENCY		73% typ	78% typ	83% typ
	INRUSH CURRENT		30A typ(ACIN 110V, I_0=100%), 60A typ(ACIN 220V, I_0=100%) at cold start.		
OUTPUT	VOLTAGE	[V]	5	12	24
	CURRENT	[A]	6.0~60	2.5~25	1.25~12.5
	REGULATION, LINE	[mV]	50 Max	120 Max	240 Max
	REGULATION, LOAD	[mV]	50 Max	120 Max	240 Max
	RIPPLE	[mVp-p]	50 Max	120 Max	240 Max
	RIPPLE, NOISE	[mVp-p]	100 Max	170 Max	290 Max
	TEMPERATURE DRIFT 0~+50°C	[mV]	75 Max	180 Max	360 Max
	RISE TIME	[ms]	500 Max (ACIN 110V/220V I_0=100%)		
	HOLDING TIME	[ms]	17 typ (ACIN 110V/220V I_0=100%)		
PROTECTION CIRCUIT	OVER CURRENT PROTECTION		Works at over 110% of rating and recovers automatically		
	OVER VOLTAGE PROTECTION		Works at 115~140% of rating (In the case of 3.3V, it is 115~160%)		
ELECTRICALLY ISOLATED	INPUT-OUTPUT		AC1,500V 1 minute current 20mA, DC 500V 100MΩ (At room temperature & Humidity)		
	INPUT-CASE, FG		AC1,500V 1 minute current 20mA, DC 500V 100MΩ (At room temperature & Humidity)		
	OUTPUT-CASE, FG		AC500V 1 minute current 100mA, DC 500V 100MΩ (At room temperature & Humidity)		
ENVIRONMENT	OPERATING TEMP AND HUMID		-10~+50°C, 20~90% RH(Non Condensing)		
	STORAGE TEMP AND HUMID		-20~+75°C, 20~90% RH(Non Condensing)		
	VIBRATION		10~55Hz at 1G, 3 minutes period, 30 minutes along X, Y and Z axis		
	IMPACT		10G for 20ms once on each X, Y and Z axis		
SAFETY	SAFETY REGULATION		–		
	LINE CONDUCTED RF VOLTAGE		–		

ESF300-S EXTERNAL VIEW

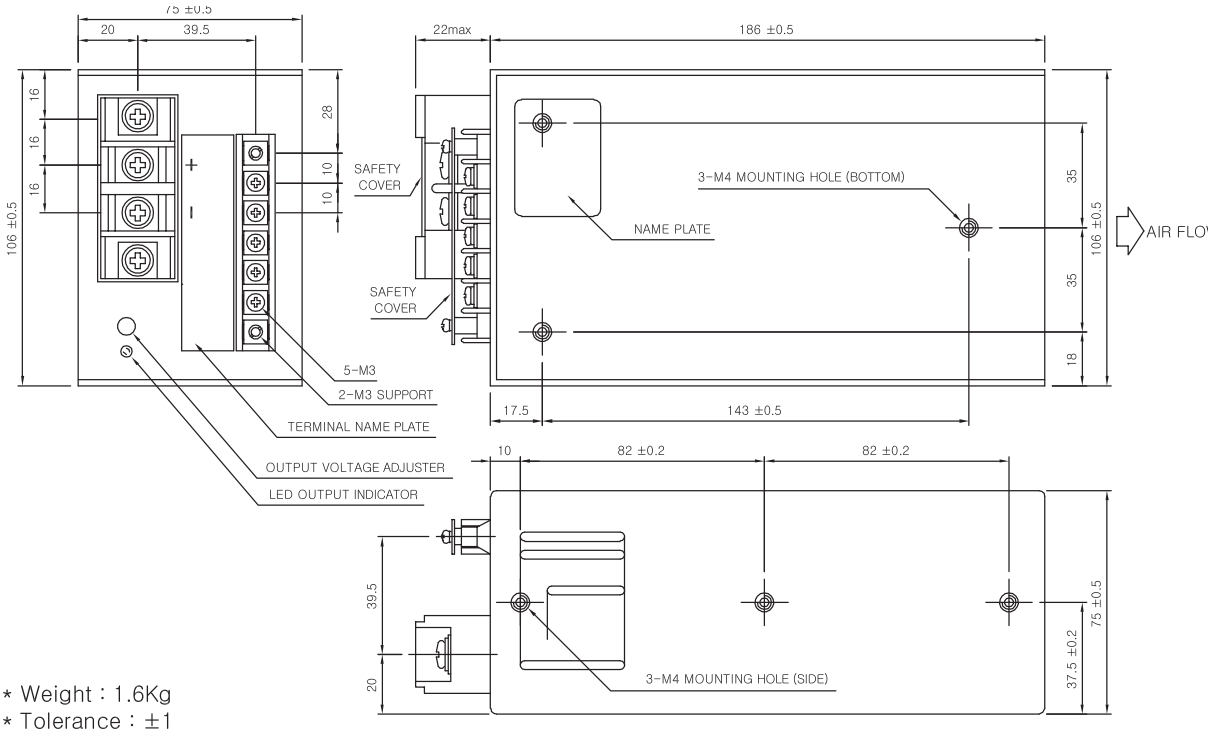

* Weight : 1.6Kg
* Tolerance : ±1
* Dimensions in mm